Limited Warranty

All HighTechSpeed products are warranted against defects in parts and workmanship under normal use and correct installation for a period of one year from the date of purchase. If any returned product is found to be defective as described above, the product will be repaired or replaced at the discretion of HighTechSpeed. This shall constitute the sole remedy of the purchaser and the sole liability of HighTechSpeed to the extent permitted by law, the foregoing is exclusive and in lieu of all other warranties or representations whether expressed or implied, including any implied warranty of merchantability or fitness. In no event shall HighTechSpeed be liable for special or consequential damages. This warranty does not cover damage outside of normal use as mentioned above, including but not limited to accident damage, fire or theft, or damage determined to be outside of the normal use of the product. Any modifications to the product that could interfere with its operation in any way voids the warranty. Tampering or removal of the "warranty void if removed" sticker will void your warranty. Any attempt at repairing the product voids the warranty.

Warranty Procedure

In order to obtain warranty repair or replacement, you must follow the following procedure:

1. Contact HighTechSpeed either by phone or email, and request a RMA (return merchandise authorization) number. Our phone number is (888) 40-SPEED. The email address for service is service@hightechspeed.com.
2. Include a note in your package describing the problem in as much detail as possible. Please give information on the problem, the symptoms, and under what conditions you notice the problem. Also make sure the following information:
    - Name
    - Address
    - Phone number
    - The model and year of your motorcycle
3. Write the RMA number clearly on the outside of the box

We will repair or replace your product, and return the unit to you (usually within 14 days). We will pay return ground shipping for domestic claims.

Warranty return units MUST be received within 14 days after the RMA number is issued.

CBR-600RR/CBR-1000RR UFO Light

Instructions for use

Model Year 2003 and newer

Congratulations

Thank you for your purchase of this HighTechSpeed product. Before installing this product, please be sure it's use complies with all local laws and regulations. It is the operator's responsibility to ensure that use of this product does not interfere with safe vehicle operation in any way. Please be sure to double check your installation prior to use, and familiarize yourself with the product and its operation prior to using it on your vehicle.

Warning

When working on your vehicle electrical system, always disconnect the negative cable from the battery. Furthermore, when handling the circuit board, please ensure you are not carrying a static charge. To do this, touch something metal, like part of your bike, a door handle, etc.

Note: This product does NOT modify the flash speed of your turn signals. Removing the signals may cause the flasher relay to operate too quickly or too slowly. This behavior can also be caused by aftermarket turn signals. Perform any modifications to your factory turn signals and ensure correct operation prior to installing this product. Be sure to consult local laws and regulations.

Table of Contents

Included items....2
Required Tools....2
Installation....3
Operation....5
Troubleshooting....6
Vehicle Wiring Diagram....7
Limited Warranty....8

HighTechSpeed

Included items

The following items are included with your integrator kit.

1 x controller

1 x R6 LED board

1 x interconnect cable

1 x power harness

2 x tap splice

3 x butt splice

If your kit does not include these items please contact us immediately.

Required Tools

You will need the following tools to install this product.

1. Phillips screwdriver
2. Sharp utility knife or box cutter
3. Strong pliers
4. Silicone glue or other appropriate plastic glue
5. ½” drill

Vehicle Wiring Diagram

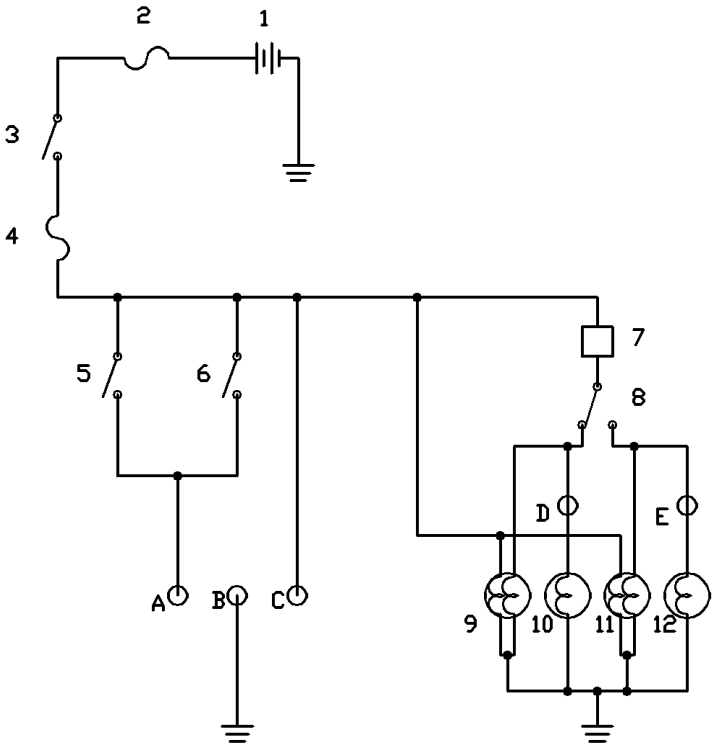

1. Battery
2. Main Fuse
3. Main Switch
4. Signal Fuse
5. Front Brake Switch
6. Rear Brake Switch
7. Flasher Relay
8. Turn Signal Switch
9. Front Left Flasher Light
10. Rear Left Flasher Light
11. Front Right Flasher Light
12. Rear Right Flasher Light

A. Brake Connection
B. Ground
C. Running Light
D. Left Turn
E. Right Turn

Troubleshooting

If you are having trouble with the unit first verify all connections are correct. Below are some common problems and solutions.

Problem	Resolution
Unit does nothing	Verify the white and black wires are connected correctly.
Center light is not lit	The two interconnect wires may be reversed on the LED board. Verify the wires are connected correctly.
Unable to choose a pattern	For safety reasons, the ability to program the unit is disabled once the brakes or turn signals have been used. Turn off the bike, wait 10 seconds, then turn the bike back on. Programming will now be enabled.
Turn signals do not work	Verify the connections to the gray and purple power harness wires. Ensure a turn signal pattern has been selected.
Brake does not work	Verify the connection to the yellow power harness wire.

Power harness Connections

Color	Description	Signal
White	Running/Power	+12V
Black	Ground	Ground
Yellow	Brake	+12V when brake active
Gray	Right Turn	+12V flashing when right turn active
Purple	Left Turn	+12V flashing when left turn active

Installation

Note: The control unit is not water tight and must be mounted in a dry location. If a suitable location cannot be found, please take steps to prevent moisture from damaging the unit. A rubber balloon with the wires going through the small end and a rubber band around the wires is a good choice.

1. Disconnect the negative battery terminal.
2. Remove your factory tail light. For instructions on how to remove the light please consult the service manual, your local dealer, or locate directions online.
3. Cut the 3 wire plug from the factory tail light as shown below. Do not cut the wire too close to the plug.

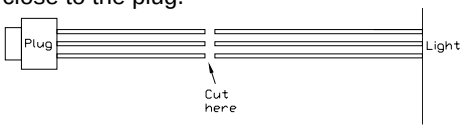

4. Connect the factory plug to the supplied power harness using the 3 supplied butt splices.

Harness Color	Light wire color
Black	Black
White	Black with White Stripe
Yellow	Black with Yellow Stripe

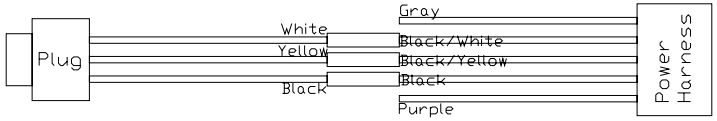

5. Open the factory light housing. The easiest way is to take your time, score around the base where the clear lens meets the black back. You can also use a dremel or similar tool, or use a small flat-head screwdriver and lightly tap it in between the clear cover and black ABS backing, then pry up and work around until the cover comes free.
6. Remove and set aside the screws holding the factory light board to the black light back. Remove the factory light board. You should be left with the black plastic shell.
7. Enlarge the factory wire hole to about ½” round. The easiest way to do this is to use a drill.
8. Thread the 2 small ends of the interconnect cable through the hole in the black light back.

9. Connect the interconnect cable to the new LED board. One of the plugs is marked with a white dot. This goes in the connector that is marked with a small arrow. Ensure the tab on the plug slides into the tab on the socket.

10. Use the supplied small-size zip-ties to secure the connectors to the LED board. There are two-rows of 5 wires on the cable, and two rows of 5 metal legs on the connector where it goes into the LED board. Thread the zip-tie between the two layers of wire near the connector, and then thread through the two layers of metal pins on the connector. This prevents the cable ever coming loose from the LED board. See picture:

11. Using the factory screws, fasten the new LED board to the black light back.
12. Plug the power harness into your bike using the attached factory light plug. Connect the 2 remaining wires to the positive side of the turn signals using the tap splice connectors. Gray is the right side, purple is the left side.
13. Plug the power harness into the controller.
14. Plug the interconnect cable into the controller.
15. Verify all wiring is correct. The power harness wire colors match the factory wiring colors.
16. Reconnect the negative battery terminal and turn on your bike.
17. Verify the unit is operating correctly. Refer to the operation section of this manual for instructions on how to change the patterns.
18. **Once you have verified the unit is working correctly** you can seal the tail light back up. Use silicone to reattach the lens to the tail light back. Secure the controller and wiring as necessary with zip ties or other appropriate fasteners. You can use silicone sealer to waterproof where the wires enter the taillight housing.

Note: If you need to remove the connectors from the controller, be sure to pull the connectors out by the white plug and not by the wires.

Operation

For safety reasons, the controller buttons become disabled when the brake or turn signals are used. To enable the buttons, shut off your bike, wait 10 seconds, then turn the bike back on.

Setting the Brake Pattern

1. Press and hold the BRAKE button on the controller.
2. Press the up arrow ▲ to advance to the next pattern. Press the down arrow ▼ to return to the previous pattern.
3. Once you have found a pattern you like, release the BRAKE button.

Note: A preview of your brake pattern will appear when the ▲ and ▼ buttons are pressed. The pattern will disappear when the ▲ and ▼ buttons are released. There is no need to operate the bike's brake to see the pattern. Operating the brake will disable the programming buttons.

Setting the Turn Pattern

1. Press and hold the TURN button on the controller.
2. Press the up arrow ▲ to advance to the next pattern. Press the down arrow ▼ to return to the previous pattern.
3. Once you have found a pattern you like, release the TURN button.

Note: A preview of your turn pattern will appear when the ▲ and ▼ buttons are pressed. The pattern will disappear when the ▲ and ▼ buttons are released. There is no need to operate the turn signals to see the pattern. Operating the turn signals will disable the programming buttons.

Note: One of the turn signal patterns is "no turn signals". This allows the integration to be turned off by the user without rewiring.

Note: Be sure to try your turn signal setting with the brake on to see how the two patterns interact.

Setting the Running Light Pattern

1. Press and hold the RUN button on the controller.
2. Press the up arrow ▲ to advance to the next pattern. Press the down arrow ▼ to return to the previous pattern.
3. Once you have found a pattern you like, release the RUN button.

Note: Operating the brake or using the turn signals will disable the programming buttons.